National Lock C8715 Pin Tumbler Mail Box Lock -NL C8715

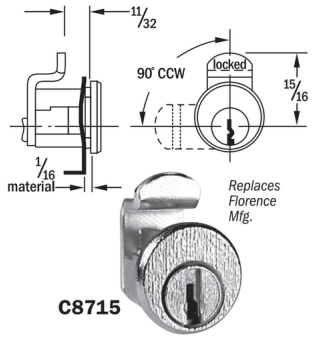

nl_c8715.png



Rating: Not Rated Yet
Price
Price Each:$10.03

Ask a question about this product

Description

National Lock C8715 Pin Tumbler Mail Box Lock Replaces Florence Manufacture. GENUINE FACTORY REPLACEMENT LOCKS APPLICATION ? For doors on architectural mail boxes serviced by United States Postal Service. OPERATION ? 90? cam turn. See drawing for specific operation. Key removal in locked position only. Cams not removable. KEYING ? Available keyed differently only (1,000 changes). Key blank part number D4291. PACKAGING ? Supplied with two keys and a spring mounting clip.