Fort MFW23078 Universal Cam Lock 7/8" Keyed Alike to 221 - MFW23078-221

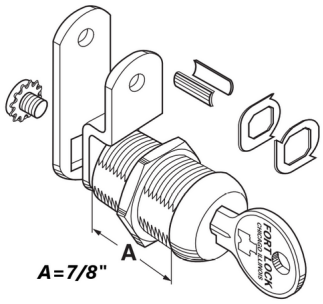

fl_mfw23078.png

Rating: Not Rated Yet
Price
Price Each:$8.83

Ask a question about this product

Description Single Bitted Cam Lock with Universal Keyway 23000 Series Stainless Steel finish 7/8" 'A' Dimension keyed Alike to 221 Uses Fort KN54G Key Blank. The concept of Multi-Function is to make one bag of components available to produce many different functioning locks (up to 6 different functions in our single bitted lock bag). This enables the locksmith to carry fewer locks in inventory while still having complete stock on hand. Multi-Function bagged cam locks include our patented Wonder Washer, which allows for installation into either wood or metal without the use of a double ?D? punch.